TELESCOPIC EXTENSION / 540

Table Slide with Single Leg

ASSEMBLY INSTRUCTIONS

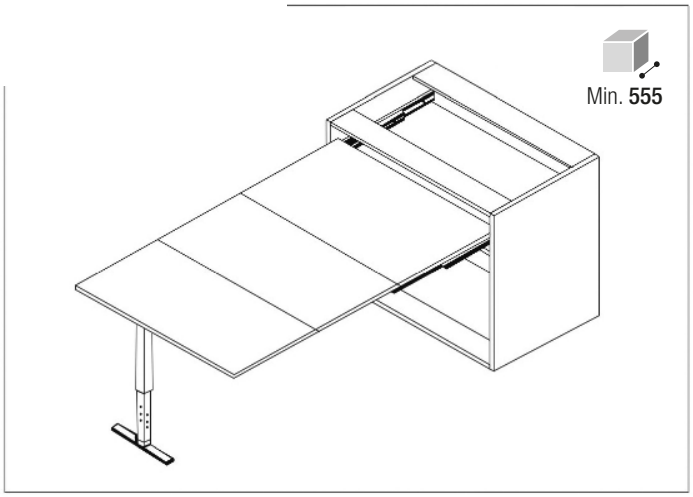

Description

1.Extended to be a 2m long dining table, which is enough for a family or 4~6 persons to use.

2.Made of aluminum alloy with steel plates

3.Wide usage:can be used on desk,cabinet and dining table

4.Extended smoothly and quietly

5.Easy installation

6.Load capacity:70kg

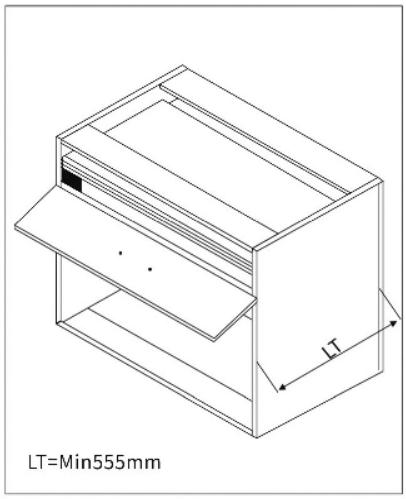

Details

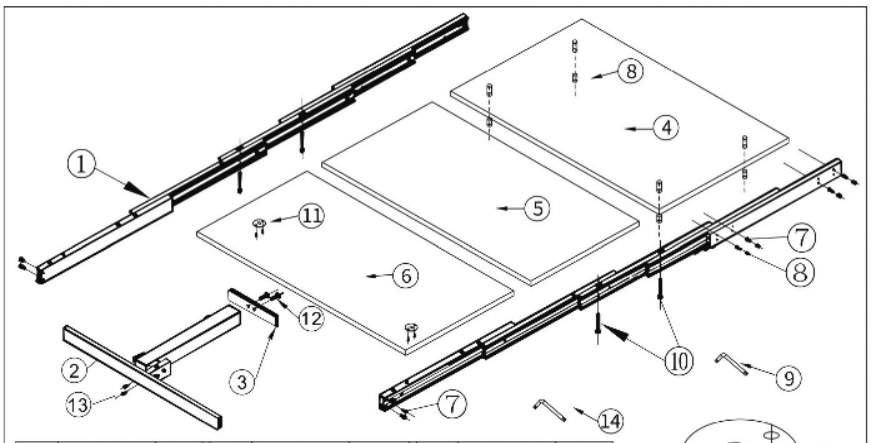

No.	Item	Qty	No.	Item	Qty	No.	Item	Qty
1	Table Slide	L+R	6	Fold Plate L3	1pcs	11	Lock Plate	2pcs
2	Crossbar	1pcs	7	M6*12	12pcs	12	M6*16	2pcs
3	Square Leg	1pcs	8	Copper Nut	12pcs	13	M6*25	2pcs
4	Fix Plate L1	1pcs	9	Tool-6mm	1pcs	14	Tool-3mm	1pcs
5	Fold Plate L2	1pcs	10	M6*62	4pcs	15	Tool-4mm	1pcs

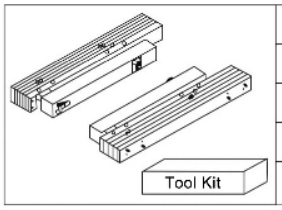

Item:	Ref.: F19239
Material:	Aluminum Alloy
Size:	540mm
Qty:	1set
Package:	1set/ctn

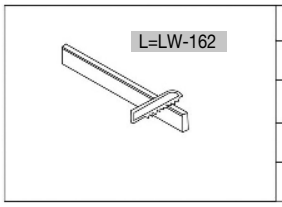

Item:	Crossbar
Material:	Aluminum Alloy
Size:	L=LW-162 (customzied availbale)
Qty:	1set
Package:	1set/ctn

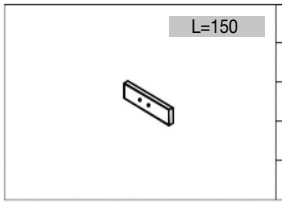

Item:	Square Leg
Material:	Aluminum Alloy
Size:	L=150
Qty:	1set
Package:	1set/ctn

Table Details(mm)

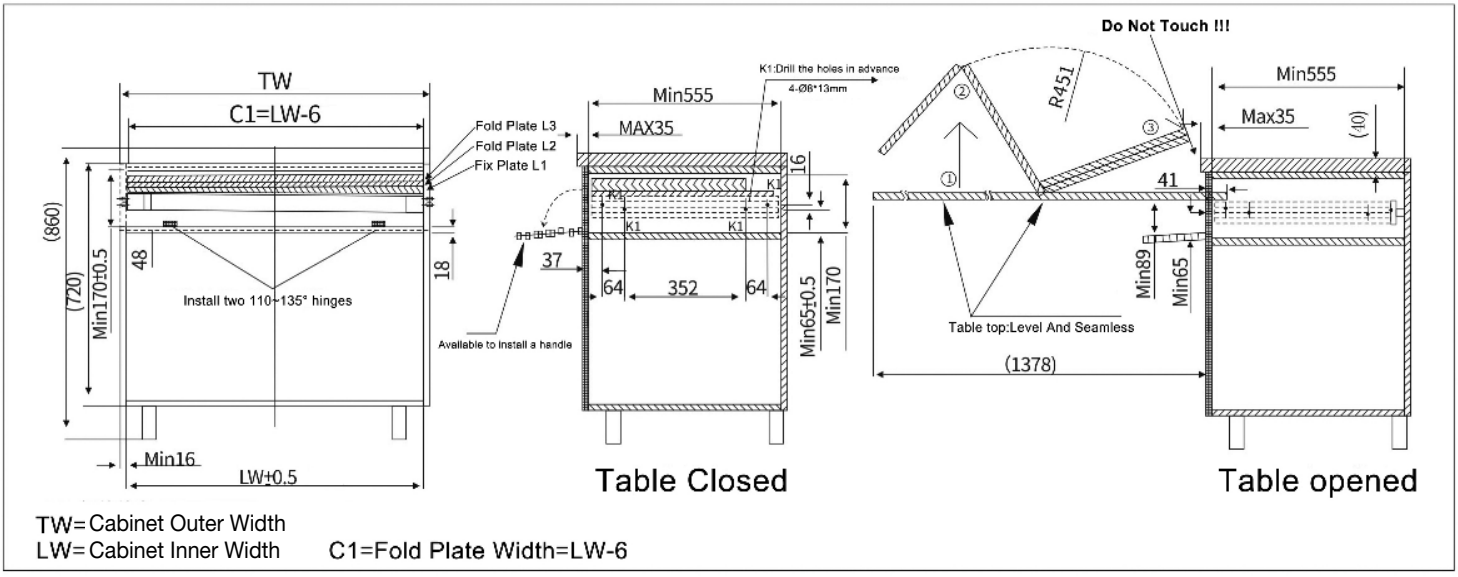

TW= Cabinet Outer Width
LW= Cabinet Inner Width C1=Fold Plate Width=LW-6

Installation Details

Plate Size

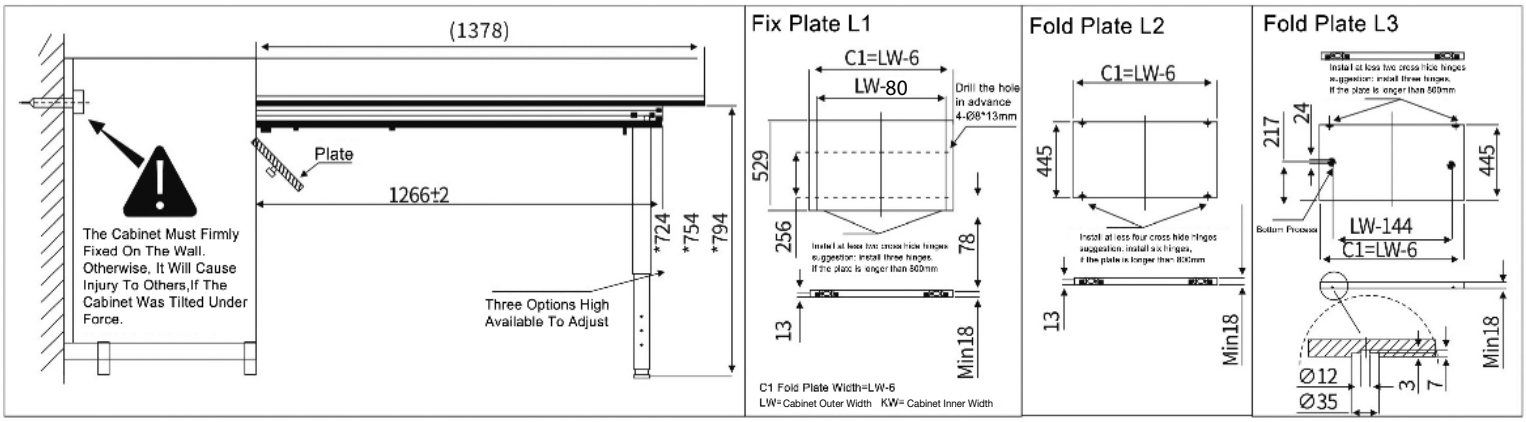
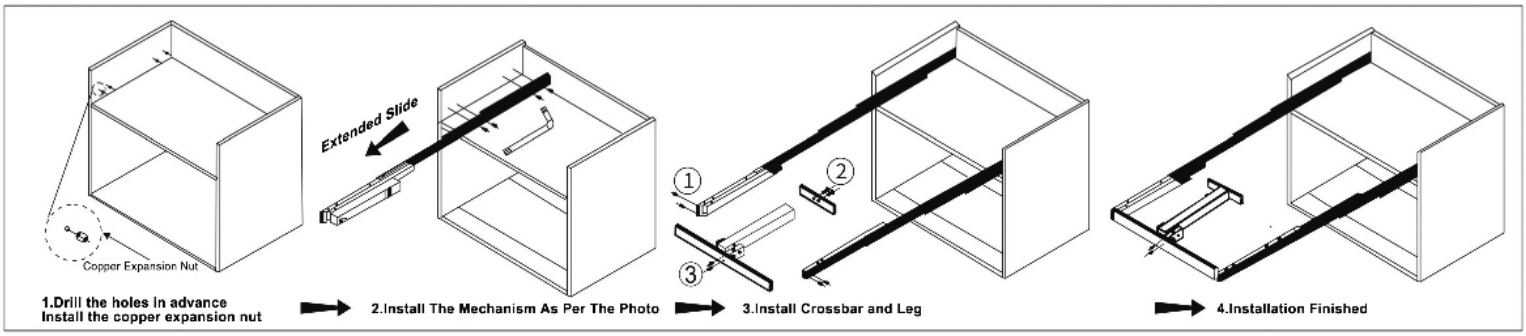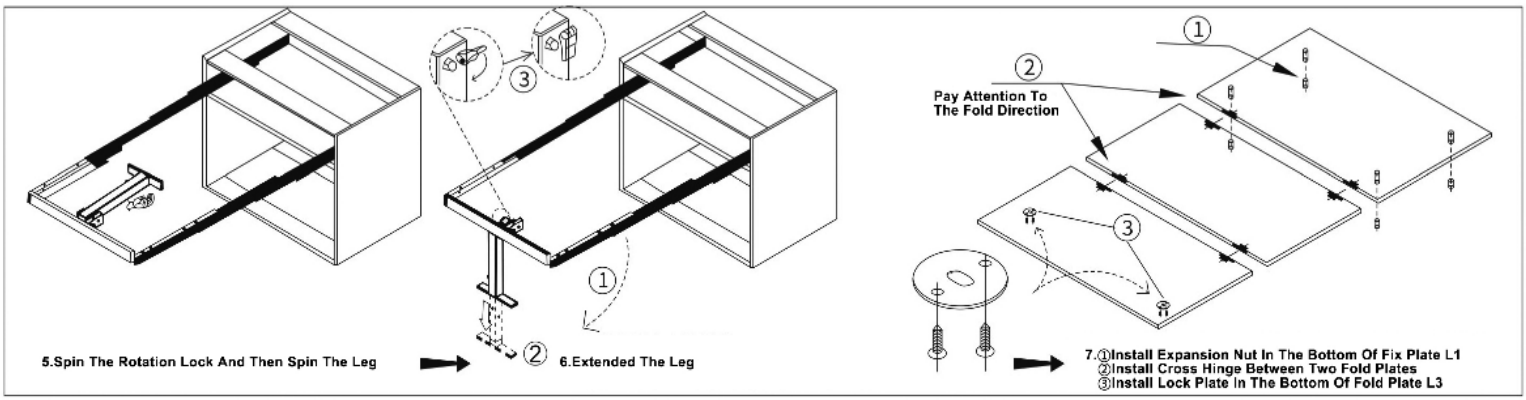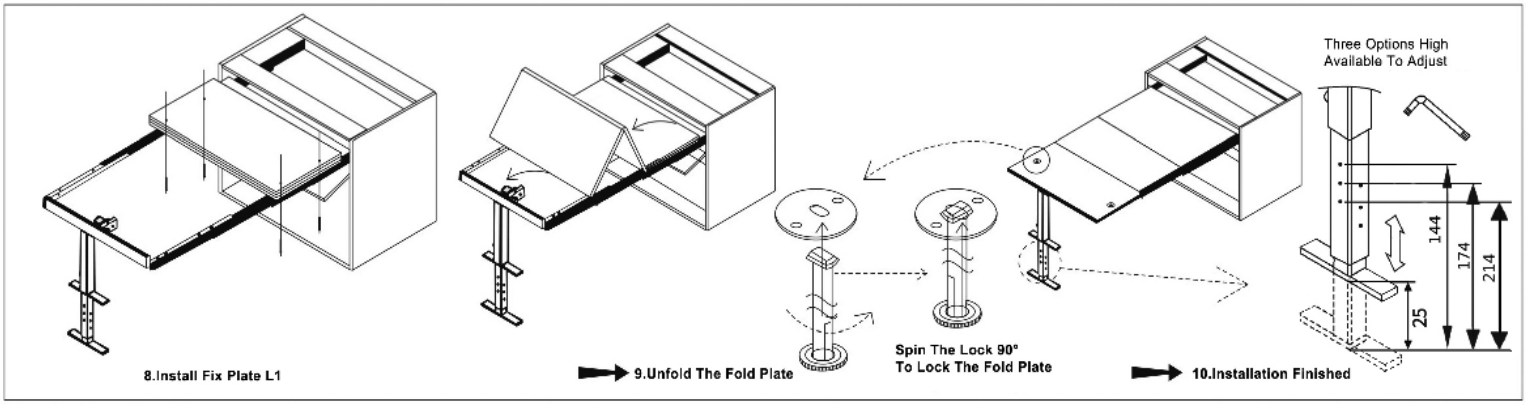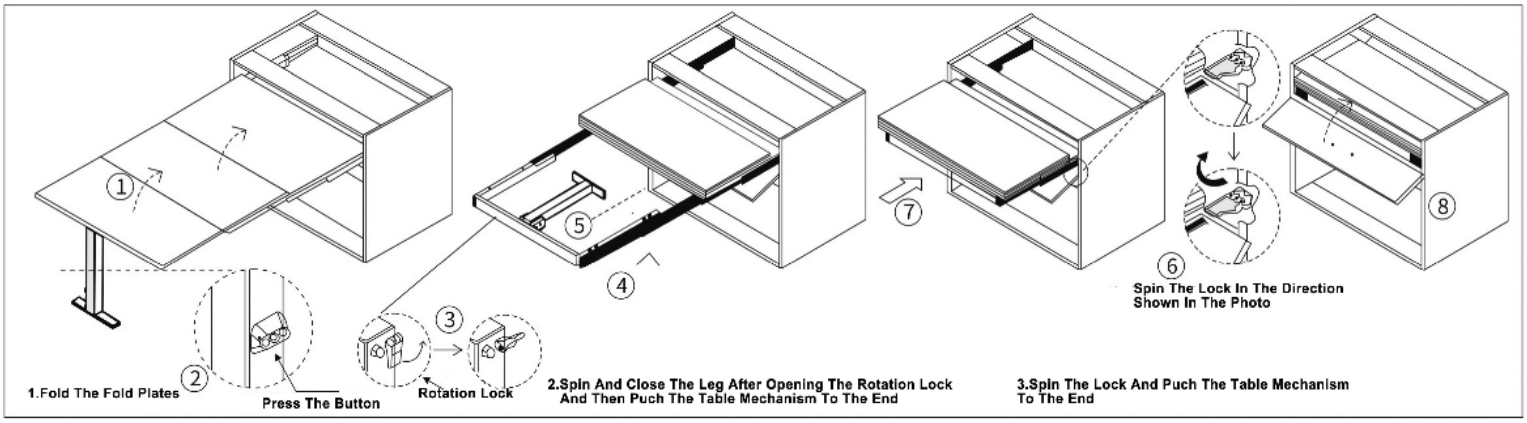
Table Mechanism Installation Details